SOMATEC® Komponenten für den Maschinenbau

Klaus Mayer • Gewerbestr. 19 • 88636 Illmensee • Tel. 07558/9214-0
www.somatec-mb.de • info@somatec-mb.de • Fax 07558/674

Pneumatic rotational stop

pivoting left / right and left

with 6 to 16 stop positions
for automation

PRVA-8 NT size 65
45° division with sensor

Size 65 is available in
division 8- and 12-fold

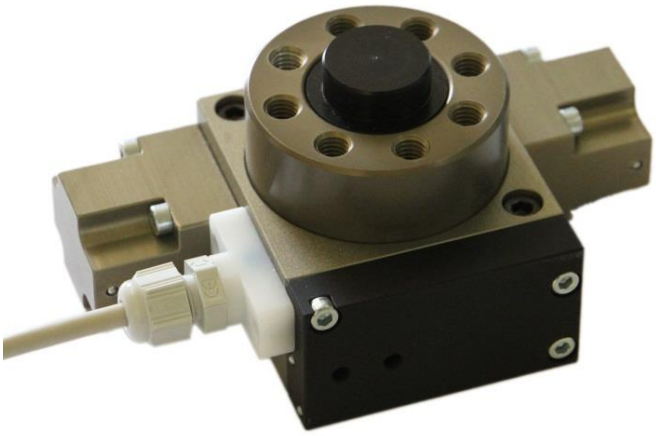

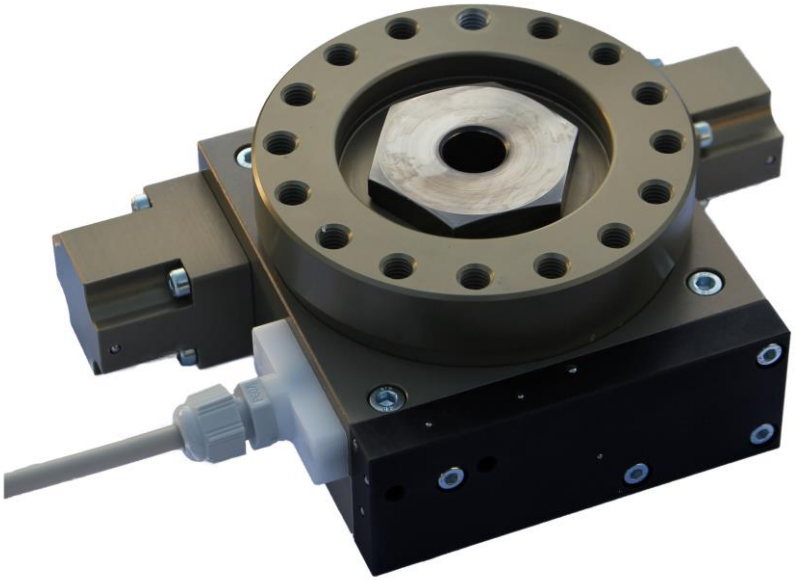

PRVA-16 NT size 105
22,5° division with sensor

Size 105 is available in
division 6, 8, 10, 12
and 16-fold

In contrast to our previous version of PRVA, our new version PRVA-NT offers the following advantages:

- **Internal item query:** Its internal binary coding prevents metal shavings from being sucked index otherwise cause failure during operation.
- **Two connection options:** Various connection plates enable the **linking cycles** or the **right and left cycles.**
- The **interior** of the rotating boss is shielded so that it is **dustproof**.
- Higher **load capacity** with longer **service life.**
- **Non-pressurized locking:** Higher load capacity with longer service life.
  The lock cylinder's spring force locks the rotary member in the non-actuated state.
- **Absolute Coding:** Any of the stop's switching positions can be detected using absolute coding. With the exception of: *PRVA-16 NT BG 105* and *PRVA-8 NT BG 65*. Which are displayed as zero for position 16 or position 8.

- Application:

With our rotational stop, many problems can be solved inexpensively in mechanical and plant engineering. For example, if one or more stops need to be adjusted at the same time, if stops are located in inaccessible places, or to make a work process more efficient and safer.

Cycle times are shortened many times over due to the fact that pre- and back-over clocking are options, in contrast to the previous rotation stop. The extremely long service life, in excess of way more than 10 million cycles, makes new uses possible, such as separating and sorting work, or it can also be used as a small rotary element for light assembly work.

Operation:

A 5/2-way valve is used for operating the element in the rotational direction (that is, rotating in a counter-clockwise direction) and two 5/2-way valves are required for the oscillation mode (that is, swiveling left and right).
The nominal valve diameter should be about 1.5 mm. For long activation hoses, four cycles per second can be achieved using a smaller nominal diameter.
There is no unwanted over-clock because the stop's lock is non-pressurized, e.g. if the air supply fails due to an emergency shut down or when powering up the equipment (the last position remains in place).

Design:

The stop is designed for maintenance-free operation. It is recommended to use only clean and dry air. All aluminium parts (in so far as they represent and advantage) are hard anodized; the steel parts nitrided or case hardened.

Service life of the stop:

Several factors play a role in the service life of the stop.

For example:

- Amount of air pressure with which the stopper is operated
- Throttled or unthrottled operation of the stop
- Weight of the mass shift
- Cycles per second

Although the element has a virtually unlimited service life, the unit should be serviced approximately every 10 million cycles, depending on the application, and the parts subject to wear should be replaced. Depending on their condition, the rotating unit, respective pistons for the swivel and lock cylinder, and the springs and seals are considered wear parts.

The unit should preferably be operated using exhaust chokes once the switching mass reaches 150 g.

Please note the following when choosing the clock frequency:

The greater the mass to be moved, the lower the clock frequency that must be chosen. The clock frequency should be 2 to a max. 4 cycles per second.

Rotational stop series:

The rotational stop is available in the following variants:

- Size 65 is available in division 8- and 12-fold
- Size 105 is available in division 6; 8; 10; 12 and 16-fold
- Pivoting left or right - and left (rotational direction): When changing the execution merely control and connection panel changes.

Rotational stop PRVA-8 NT – size 65

Design of pivoting left-, or left- and right are the same

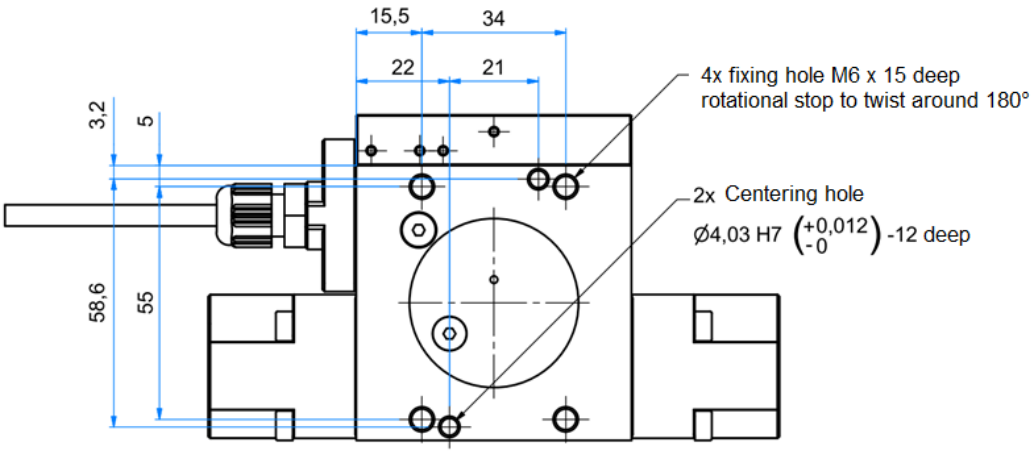

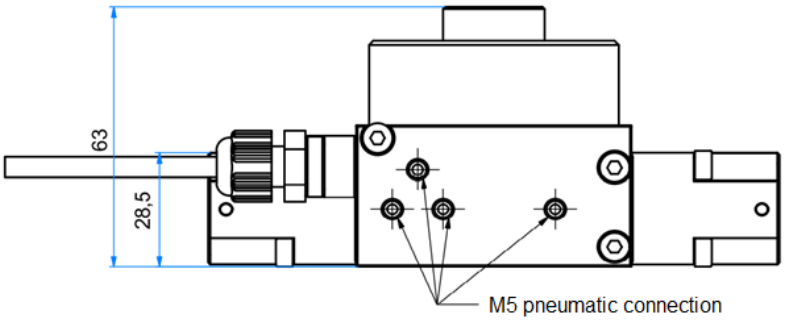

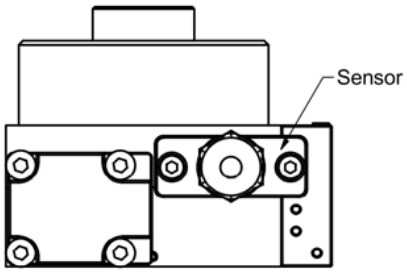

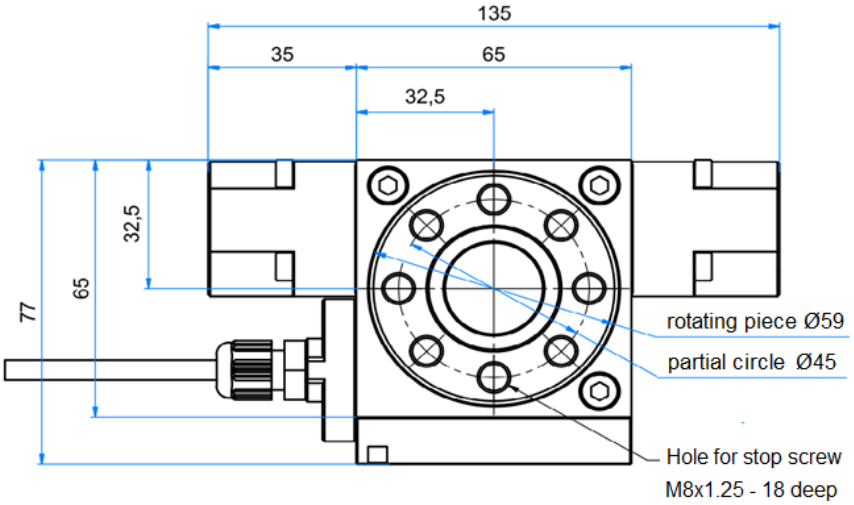

At the 12-fold rotational stop the outer dimension are identical.

Only the following dimensions are different:

- Rotating piece Ø64 mm
- Partial circle Ø56 mm
- Hole for stop screw: M6 -14 deep

Technical data:

Stop points:	8 or 12 pieces
Mass shift:	approx. 150 g undamped, max. approx. 800 g damped
Impact mass:	approx. 800 N at 3 - 4 m per min. undamped (approx. 3000 N at damped drivers)
Weight:	approx.760 g
Air consumption:	at 6 bar approx. 0,035 NL
Clock rate:	max. approx. 0.25 sec.
Nominal torque:	approx. 2.8 Nm (theoretical)

Sensor with 3 m PUR cable for 3-fold sensor
for rotational stop size 65

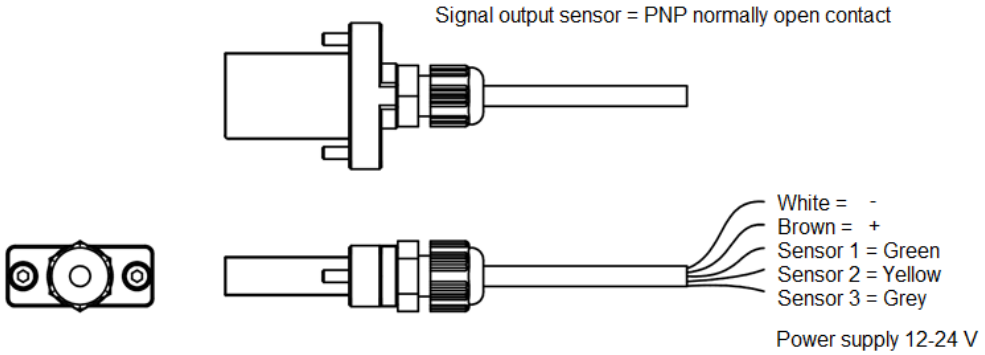

Sensor with 0,4 m cable and binder plug –
Coupling plug S.423 7pol.
for rotational stop size 65

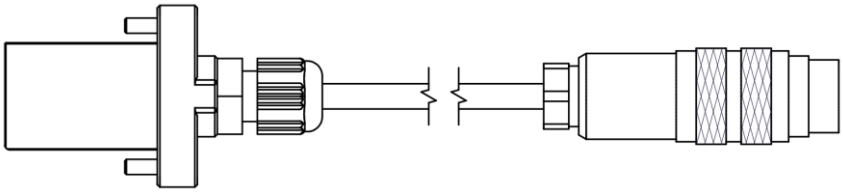

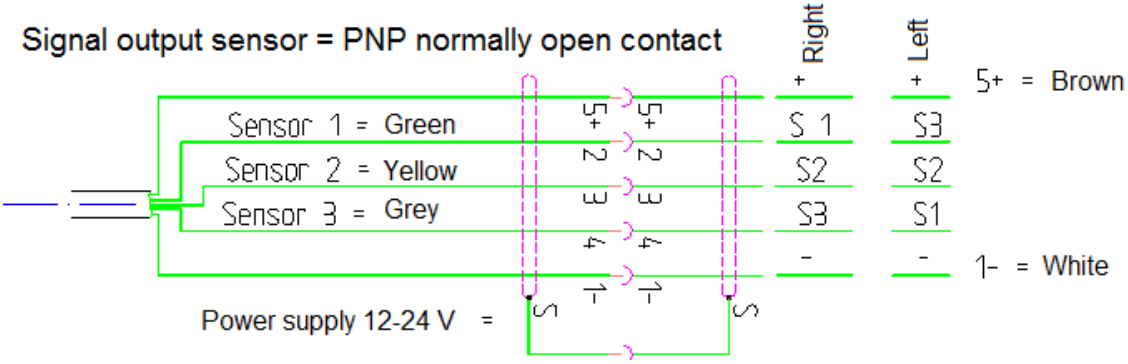

Binary code positions

Design pivoting left-, or left- and right are the same

PRVA-8 NT BG65

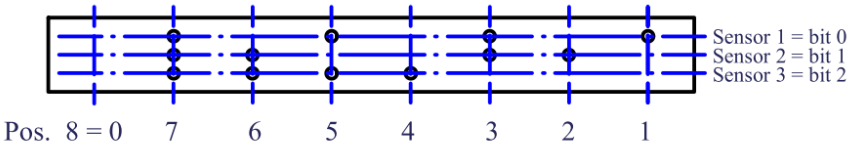

PRVA-12 NT BG65

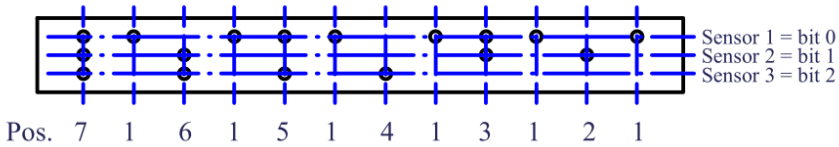

Rotational stop PRVA-16 NT - size 105

Design of rotational left-, or left- and right are the same

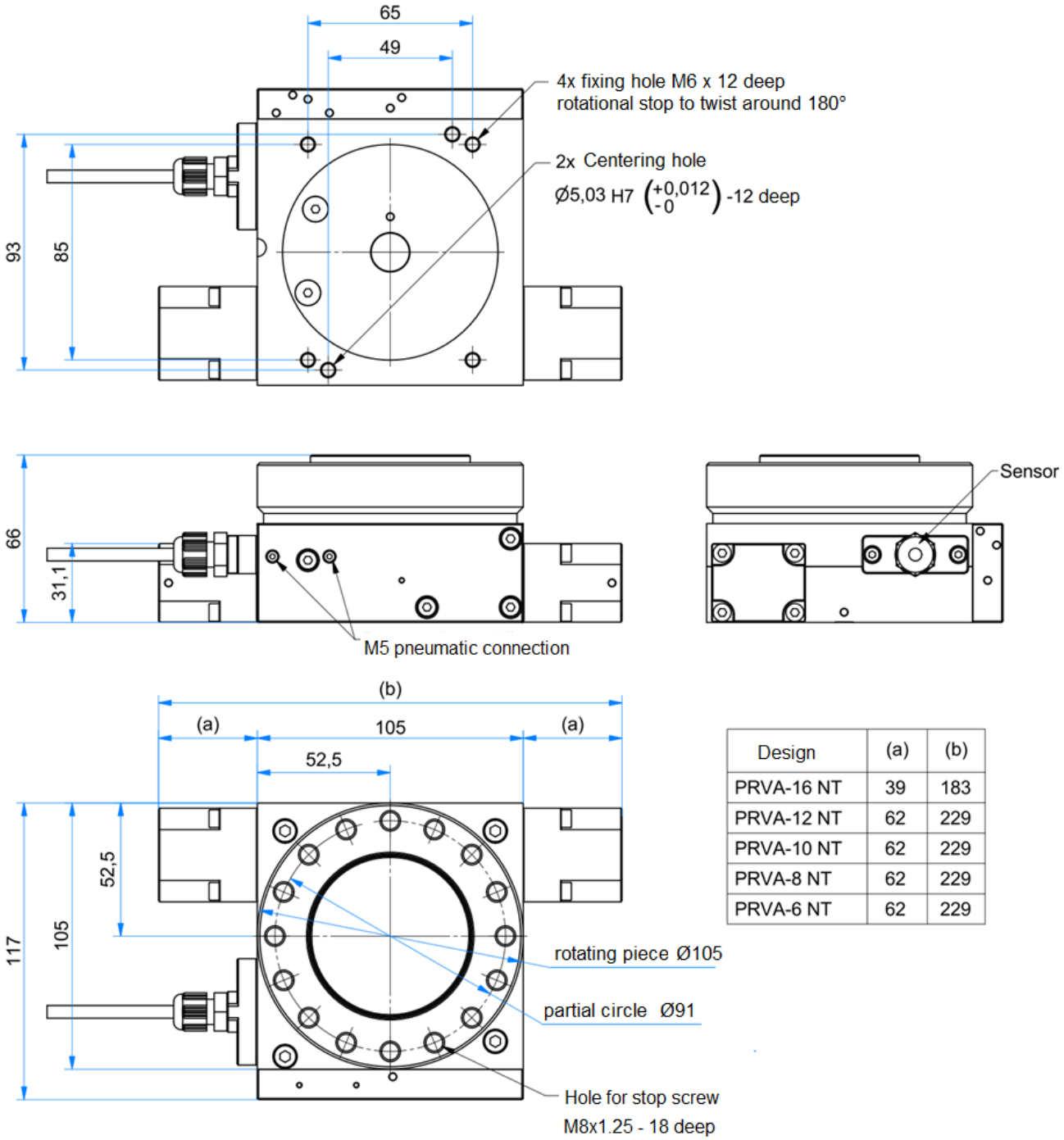

Design	(a)	(b)
PRVA-16 NT	39	183
PRVA-12 NT	62	229
PRVA-10 NT	62	229
PRVA-8 NT	62	229
PRVA-6 NT	62	229

Technical data:

Stop points:	6; 8; 10; 12 or 16 pieces
Mass shift:	approx. 200 g undamped, max. approx. 1.400 g damped
Impact mass:	approx. 800 N at 3 - 4 m per min. undamped (approx. 4.500 N at damped drivers)
Weight:	approx. 2.000 g
Air consumption:	at 6 bar approx. 0.05 NL at 16-fold
Clock rate:	max. approx. 0.25 sec.
Nominal torque:	approx. 7.5 Nm (theoretical)

Sensor with 3 m PUR cable for 4-fold sensor
for rotational stop size 105

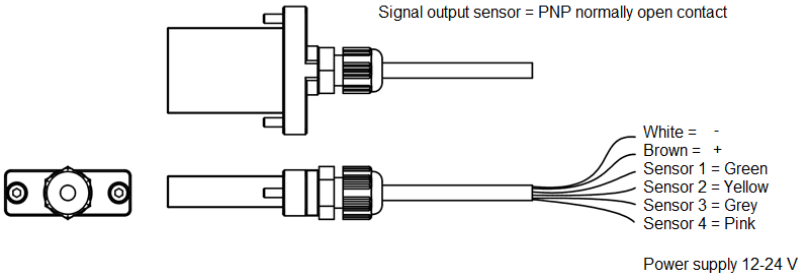

Sensor with 0,4m cable and binder plug / coupling plug S.423 7 pol.
for rotational stop size 105

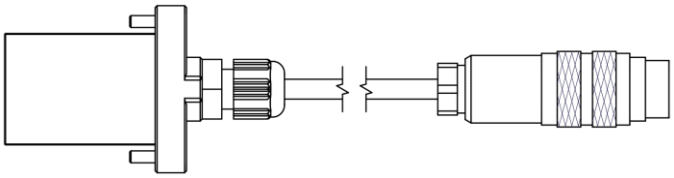

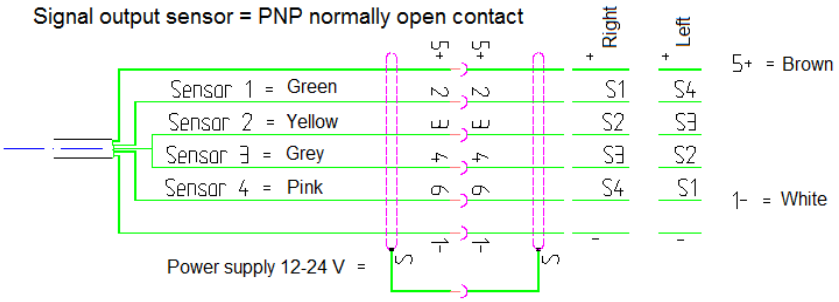

Binary code positions

Design of pivoting left-, or pivoting left- and right are the same

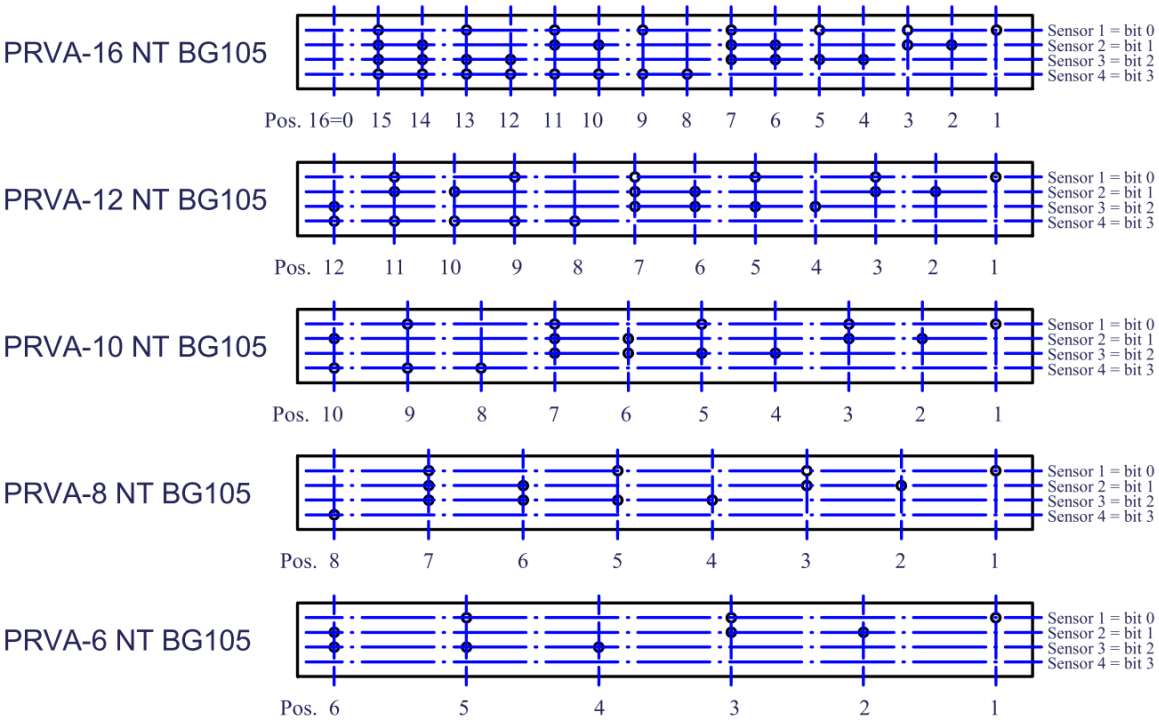

Connection plate for PRVA- NT size 65

oscillating left
Item-No. 14 05 00 1039

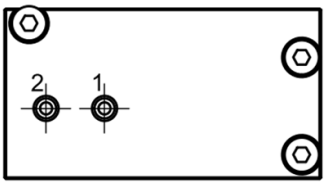

oscillating right and left
Item-No. 14 05 00 1038

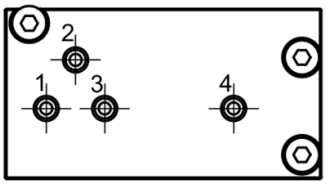

Connection plate for PRVA-NT size 105

oscillating left
Item-No. 14 05 00 1060

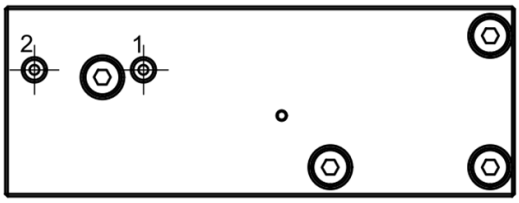

oscillating right and left
Item-No. 14 05 00 1062

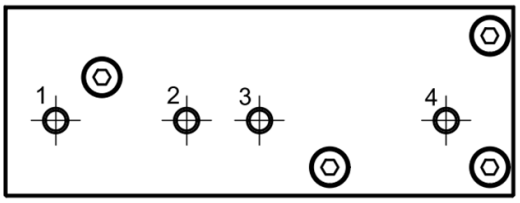

(1) Unlock locking cylinder and circle left

(2) Lock locking cylinder and base position

(1) Base position to swivel left
(2) Lock locking cylinder
(3) Unlock locking cylinder
(4) Base position to swivel right

Description of the operation / activation

The *PRVA-NT* rotational stop is *swivels in a counter-clockwise direction*

A 5/2-way valve is required to operate the unit in one rotational direction (pivoting to the left). If the rotation stop is not pressurized using air, the lock cylinder locks the rotating piece in place using spring force so that it stays in place.

For clocking, the rotational stop is actuated with the *connector plate* so that they *pivot only to the left*:

- ***Unlock the locking cylinder and pivot it to the left over the connection (1):***
  Controlling this connection unlocks the locking cylinder and locks the swing cylinder with the rotating piece at the same time, and pivots the rotating piece to the left.
  Dwell time for this working step is approx. 120 - 250ms.
- ***Lock the locking cylinder and the base position on the connection (2):***
  In this step, the lock cylinder is locked using the rotating piece / the swing arm is unlocked and swings back to the basic position. The item is back in its working position.
  Dwell time should be 120 - 250 ms for immediate continued clocking.

This results in a cycle time of 0.25 to 0.5 sec, which corresponds to about 2-4 cycles per second.

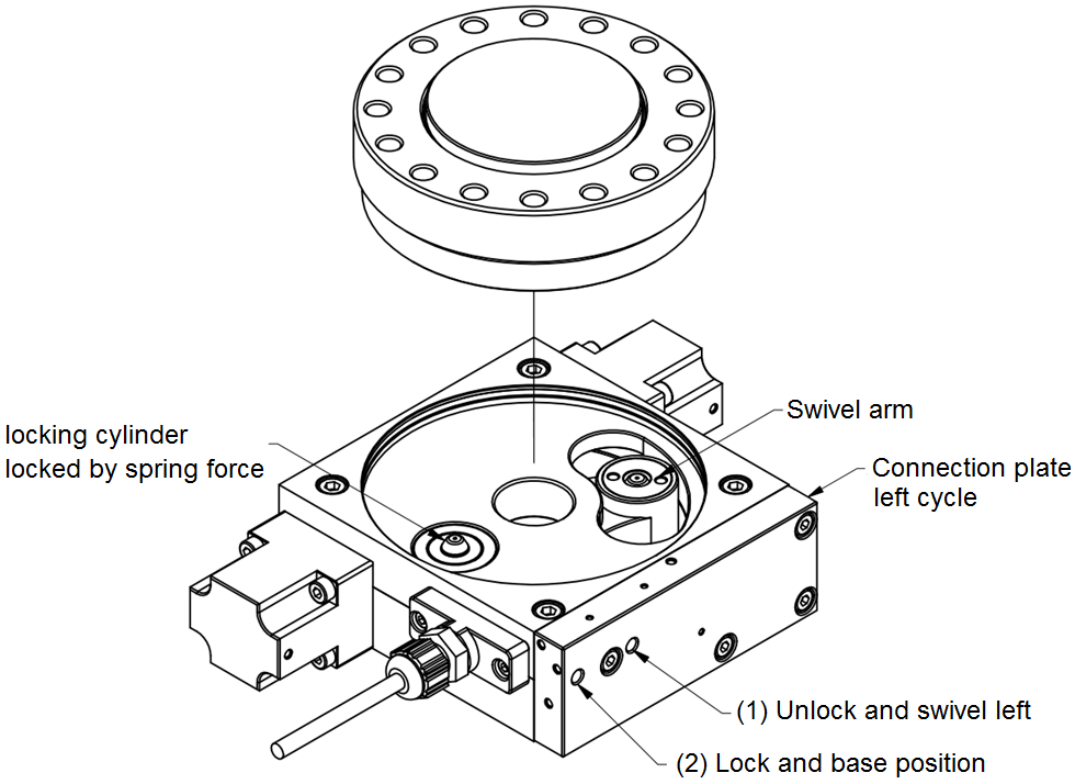

The figure above shows the PRVA-16NT pivoting counter-clockwise to the left in its basic position. At zero pressure, the locking cylinder is locked to the rotating piece using spring force. The lock cylinder on the terminal (2) must also be locked pneumatically for it to be in the working position.

Rotational stop *PRVA-NT oscillating to the right and left*

Clock operation: *swiveling in a clockwise direction*

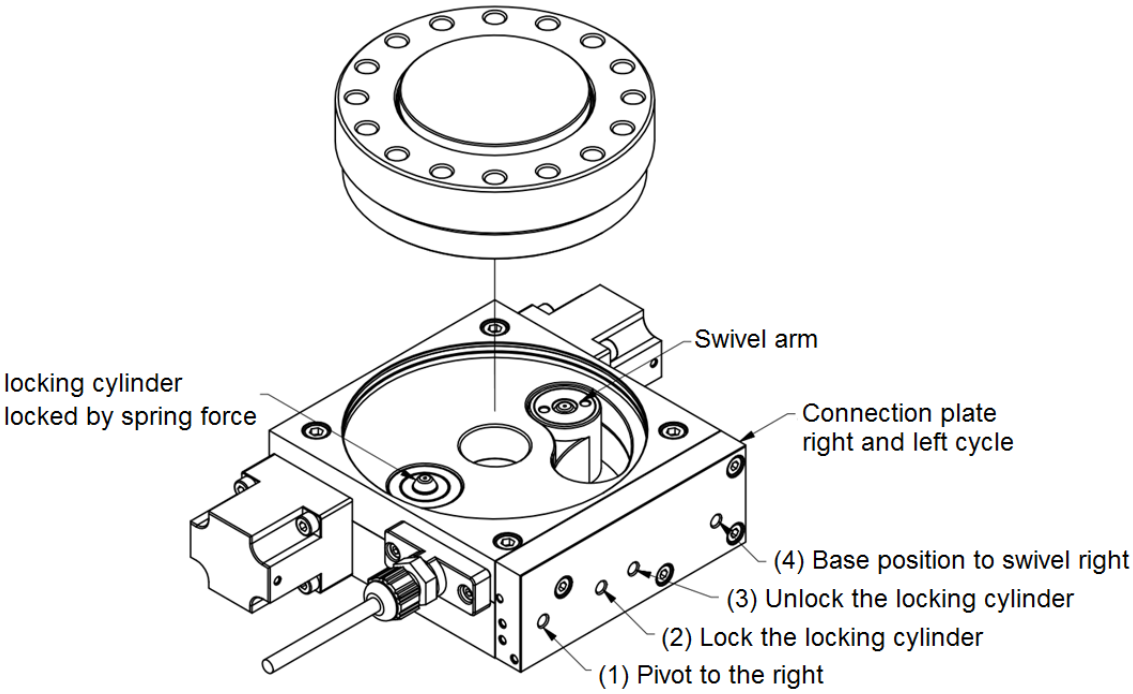

The figure above shows the PRVA-16NT oscillating to the right and left in its basic position to pivoting to the right. At zero pressure, the locking cylinder is locked to the rotating piece using spring force. The lock cylinder on the terminal (2) must also be locked pneumatically for it to be in the working position.

Clock operation: *swiveling in a counter-clockwise direction*

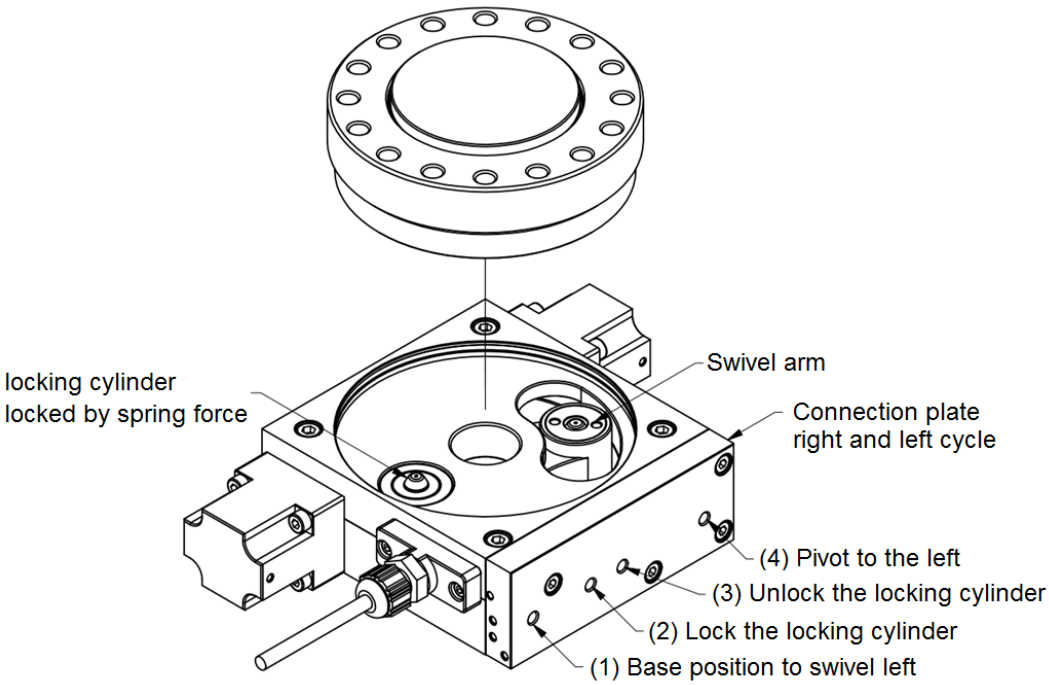

The figure above shows the PRVA-16NT oscillating to the right and left in its basic position to pivoting to the left. At zero pressure, the locking cylinder is locked to the rotating piece using spring force. The lock cylinder on the terminal (2) must also be locked pneumatically for it to be in the working position.

Two 5/2-way valves are required for it to work in swivel mode (oscillating to the right and left).

To do this, lock the terminals *(2) lock locking cylinders* and *(3) unlock locking cylinders* and the connections *(1) Pivot the basic position to the left* and *(4) pivot the basic position to the right* to the using a 5/2-way valve. Make sure that the connection *(2) Lock the locking cylinder* stays in its working position by keeping pressurized air on it.

Pivot the rotating stop ***to the right*** as follows:

- ***Pivot the swivel arm into its basic position to swivel right (4)*:** The swivel arm swivels into it basic position to swivel right. *Dwell time for the swivel procedure is approx. 100 - 250ms.*
- ***Unlock the locking cylinder via the terminal (3):*** The locking cylinder unlocks and at the same time, the pivot cylinder locks using the rotating piece. *Dwell time is approx. 30ms*
- ***Pivot the swivel arm to the right (1)*:** Move the swivel arm to the right by controlling the connector (1). During this process, the pivot cylinder stays locked with the rotating piece and turns this in a clockwise direction. *Pivot procedure dwell time: approx. 100 – 250ms*
- ***Lock the locking cylinder via the connector (2)*:** The locking cylinder is locked into place once again using the rotating piece / the pivot cylinder unlocks. *Dwell time is approx. 3ms*

Pivot the rotating stop ***to the left*** as follows:

- ***Swivel arm into its basic position to swivel left (1)*:** Move the swivel arm to the right, in his basic position to swivel left, by controlling the connector (1).
  Pivot procedure dwell time: approx. 100 – 250ms
- ***Unlock the locking cylinder via the terminal (3):*** The locking cylinder unlocks and at the same time, the pivot cylinder locks using the rotating piece. *Dwell time is approx. 3ms*
- ***Pivot the swivel arm to the left (4)*:** Move the swivel arm to the left. During this process, the pivot cylinder stays locked with the rotating piece and turns this in a counter-clockwise direction. *Dwell time for the swivel procedure is approx. 100 - 250ms.*
- ***Lock the locking cylinder via the connector (2)*:** The locking cylinder is locked into place once again using the rotating piece / the pivot cylinder unlocks. After this process the item is back in its working position. *Dwell time is approx. 30ms*

This results in a cycle time of 0.25 - 0.5 sec.; this is equivalent to approx. 2 - 4 cycles per second.

<u>Note:</u> When changing the oscillating direction from left to right / right to left, omit the first swivel procedure when pivoting into the each of the basic positions. You can start with the unlocking procedure immediately and then immediately continue with the pivoting procedure.

Order description for our rotational stop *PRVA-NT* and accessories

Description	**Item-No.:**
PRVA-8 NT inclusive connecting plate *oscillating left*	14 05 00 1101
PRVA-8 NT inclusive connecting plate *oscillating right and left*	14 05 00 1102
PRVA-12 NT inclusive connecting plate *oscillating left*	14 05 00 1111
PRVA-12 NT inclusive connecting plate *oscillating right and left*	14 05 00 1112
Sensor for 8-fold rotational stop with 3 m PUR cable	14 05 00 1050
Sensor for 8-fold rotational stop with binder plug and 0.4 m cable	14 05 00 1051
Coupling for binder plug and 5 m PUR cable for 3-fold / 4-fold Sensor	1107

Description	**Item-No.:**
PRVA-16 NT inclusive connecting plate *oscillating left*	14 05 01 1101
PRVA-16 NT inclusive connecting plate *oscillating right and left*	14 05 01 1102
PRVA-12 NT inclusive connecting plate *oscillating left*	14 05 01 1111
PRVA-12 NT inclusive connecting plate *oscillating right and left*	14 05 01 1112
PRVA-10 NT inclusive connecting plate *oscillating left*	14 05 01 1116
PRVA-10 NT inclusive connecting plate *oscillating right and left*	14 05 01 1117
PRVA-8 NT inclusive connecting plate *oscillating left*	14 05 01 1121
PRVA-8 NT inclusive connecting plate *oscillating right and left*	14 05 01 1122
PRVA-6 NT inclusive connecting plate *oscillating left*	14 05 01 1126
PRVA-6 NT inclusive connecting plate *oscillating right and left*	14 05 01 1127
Sensor for 16-fold rotational stop with 3 m PUR cable	14 05 01 1050
Sensor for 16-fold rotational stop with binder plug and 0.4 m cable	14 05 01 1051
Coupling for binder plug and 5 m PUR cable for 3-fold / 4-fold Sensor	1107